ASSEMBLEY INSTRUCTIONS

for OPUROBE

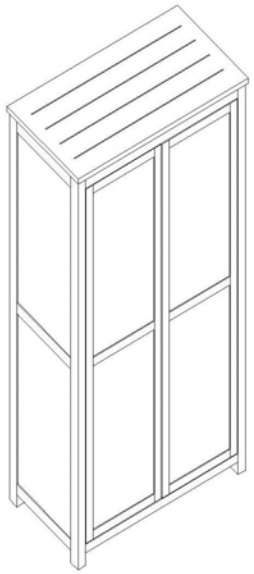

hardware list

A		x50pcs
B		x1pcs
C		x4pcs
D		x2pcs

parts list

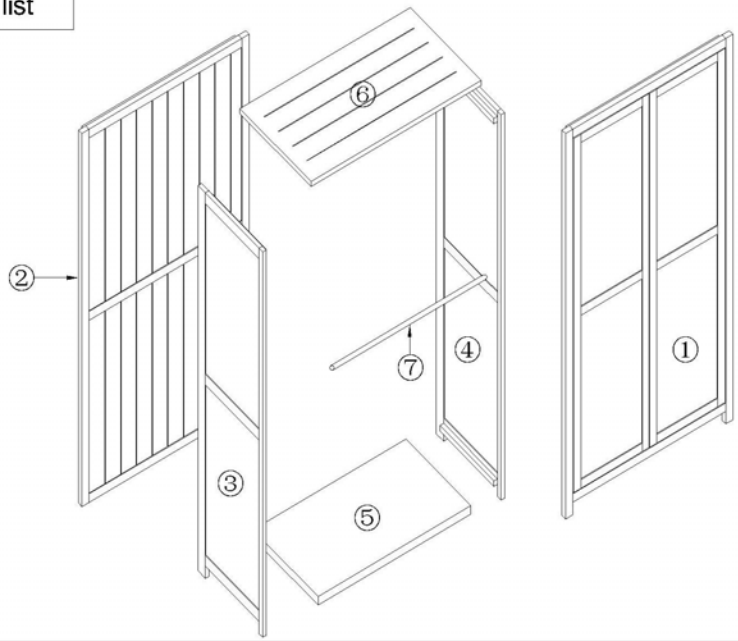

step 1. A x50pcs

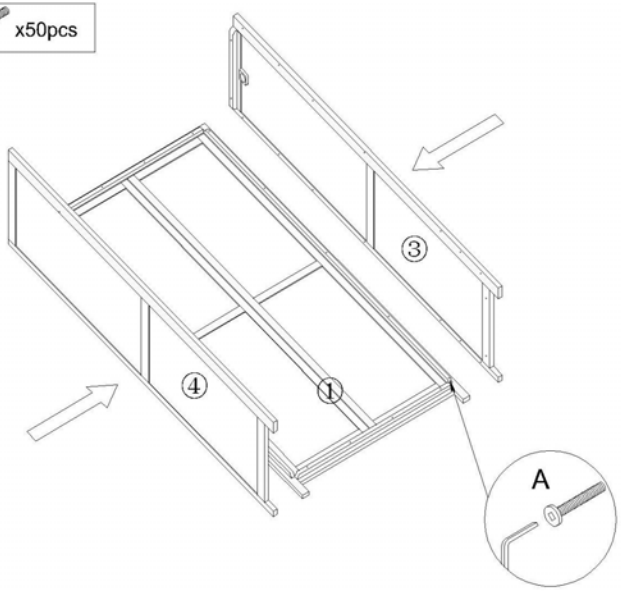

* Screw on first and tighten all the screws after step 5

step 2. A x50pcs

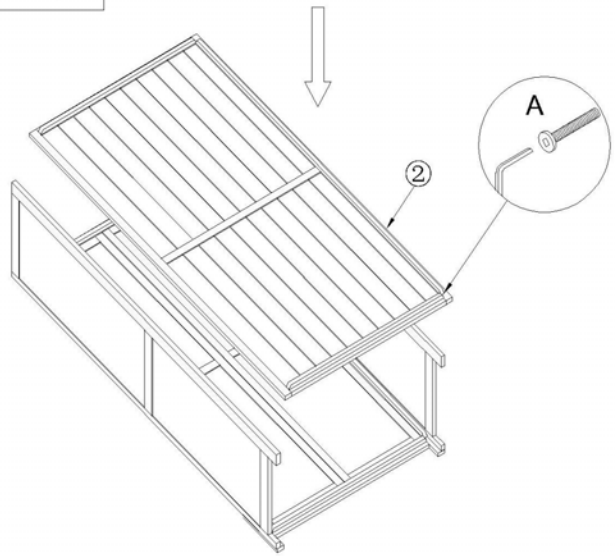

* Screw on first and tighten all the screws after step 5

step 3.

A x50pcs

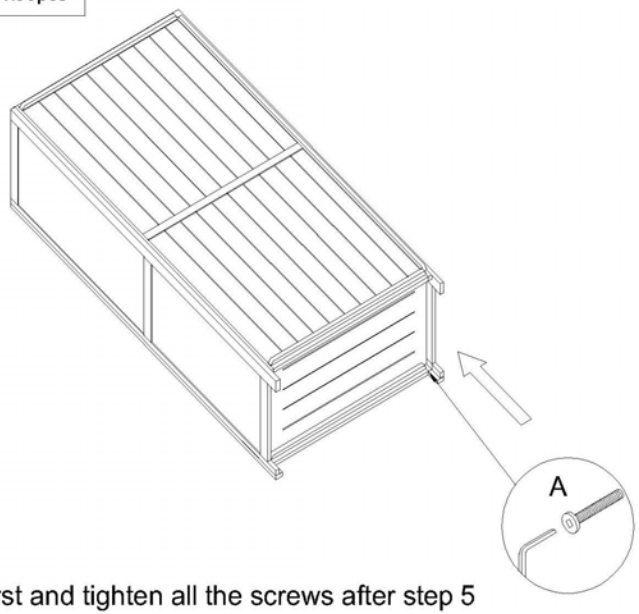

* Screw on first and tighten all the screws after step 5

step 4.

A x50pcs

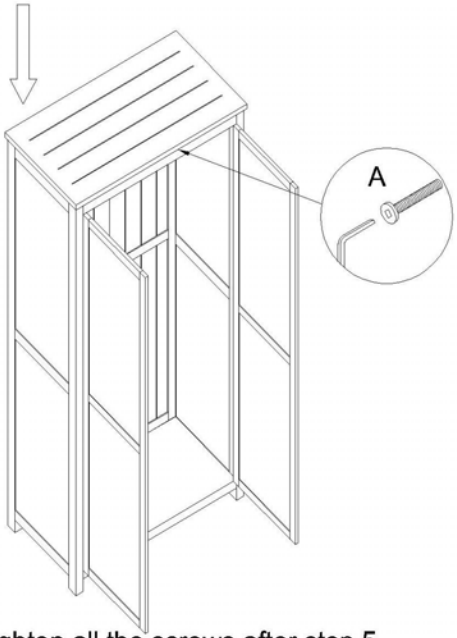

* Screw on first and tighten all the screws after step 5

step 5.

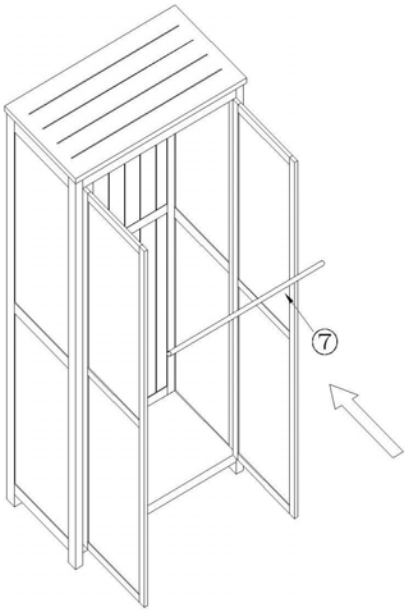

* Screw on first and tighten all the screws after step 5

step 6.

C x4pcs

D x2pcs

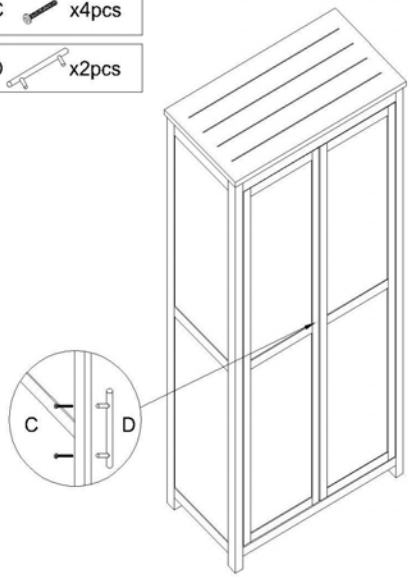

* Tighten all the screws